REVISIONS			
REV.	DESCRIPTIONS	EDIT BY	DATE:(d/m/y)

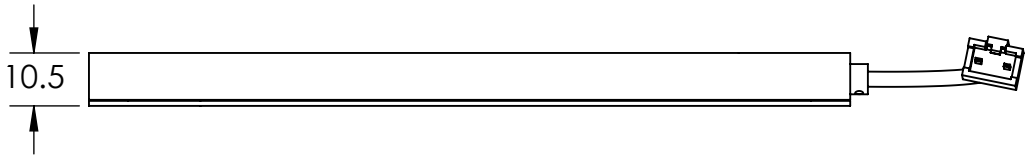

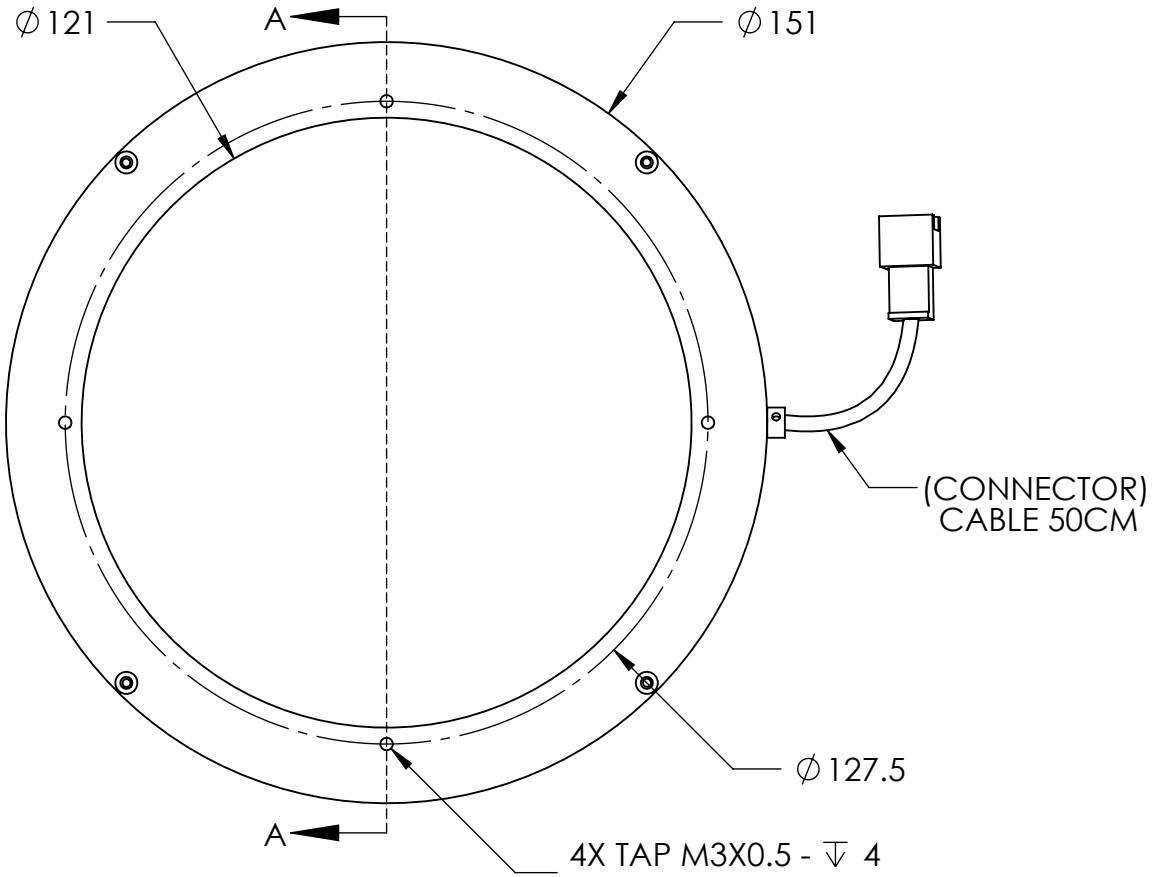

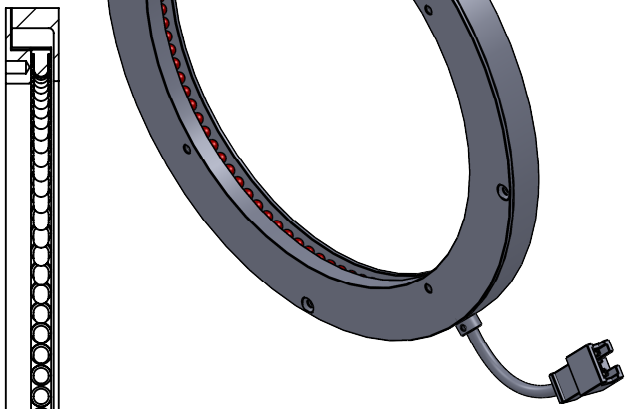

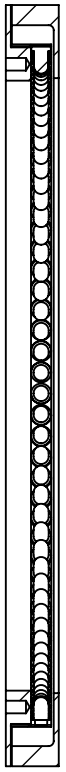

SECTION A-A
SCALE 1 : 1.5

DESIGN BY	FIRDAUS	UNIT: MM	
CHECK BY	NIZAM	SIZE A4	PRODUCT SERIES: LLA SERIES
DATE	25/5/2022	REVISION: 01	
MATERIAL	-	SCALE: 1 : 1	TITLE: DRAWING LAYOUT
FINISHING	-		PART NO: LLA-90-150-1-X-24V
QTY	-		DWG NO: -

GEN. TOLERANCES	
X	±0.15
X.X	±0.1
X.XX	±0.05
SHEET 1 OF 1	

TMS LITE SDN. BHD. (Co. No. 671971V)
LED ILLUMINATION SOLUTION PARTNER